SHEET METAL AND AIR CONDITIONING CONTRACTORS' NATIONAL ASSOCIATION, INC.

Technical Resources Bulletin

May 1, 2009
TRB #5-09
Update of TRB #1-08

To: SMACNA Members
SMACNA Chapter Executives

From: Technical Resources Department

Subject: STRI Wind Uplift Testing Project

The SMACNA Testing and Research Institute (STRI) completed wind uplift testing on custom-fabricated fascia and coping architectural elements constructed in accordance with the SMACNA *Architectural Sheet Metal Manual*.

The physical testing project was proposed to the Technical Resources Committee after the following requirement was added to the International Code Council's International Building Code (IBC):

1504.5 Edge securement for low-slope roofs. Low-slope membrane roof system metal edge securement, except gutters, shall be designed and installed for wind loads in accordance with Chapter 16 and tested for resistance in accordance with ANSI/SPRI ES-1, except the basic wind speed shall be determined from Figure 1609.

Physical Testing

All pull-off testing was done according to the Single Ply Roofing Industry (SPRI) ANSI Standard ES-1 2003 by an ANSI-accredited testing laboratory, Architectural Testing Incorporated (ATI) of York, Pennsylvania.

The testing was done in two stages. First, aluminum coping and fascia was tested and several months later testing was done for copper and galvanized steel.

While the testing was done in two distinct stages over two different time periods, **summaries** of both test reports are included in this Technical Resource Bulletin (TRB) for convenience and completeness. Users of this document need to be aware of the use of two partial test reports combined into a single TRB. The full reports are available on the Members Only portion of the Architectural Sheet Metal Council web page at http://www.smacna.org/councils/asm/.

The final test reports demonstrate that fascia and coping constructed in accordance with the SMACNA *Architectural Sheet Metal Manual* resists very high pull off forces.

HEADQUARTERS 4201 LAFAYETTE CENTER DRIVE • CHANTILLY, VA 20151-1209
MAIL ADDRESS P.O. BOX 221230 • CHANTILLY, VA 20153-1230
PHONE 703 803 2980
FAX 703 803 3732
WEB *www.smacna.org*

Using This TRB

For the Designer

Typically, the architect or his design agent will calculate the specific pull-off requirements for each architectural element. In order to do these calculations, building height, local terrain exposure, importance classification, basic wind speed, roof edge fascia height or coping height and width are all required. Since the pull-off requirements can vary on every elevation either the worst case requirement should be specified by the designer or the pull-off requirement for each architectural element must be provided on the construction documents.

Specifying the pull-off requirements for each architectural element would be analogous to a duct designer specifying the static pressure classes along an entire HVAC duct system. The duct designer and building designer provide these pressure requirements and the sheet metal contractor decides the most resource-efficient methods to use in the actual construction of the duct to meet those pressure classes and other specified design requirements.

Obviously, with a duct system that may consist of hundreds of feet of straight duct, it is more cost and resource efficient to construct to the minimum pressure class requirement of each duct segment. Time and experience will reveal if fascia and coping need to be treated in a similar, incremental manner with the designer calculating the required pull off resistance for each element or if it is most effective to simply construct all elements to the highest, calculated pull-off forces—a worst case design requirement for all fascia and coping. Considering the high resistance to pull off exhibited during the actual testing, the later design path may be preferred by all parties.

In a design-build arrangement where no roofing consultant is involved or an architect is not responsible for the roof design, contractors can develop preliminary pull-off data using a calculator provided on SPRI's web site at:

http://www.spri.org/pdf/Wind_Calculator.htm

The wind design calculator is used to calculate the roof edge design pressure required to meet the ANSI/SPRI ES-1 Wind Design Standard and the 2003 International Building Code Section 1504.5 "Edge Securement for Low Slope Roof."

The SPRI web site provides additional instruction and precautions regarding the calculations.

Using This TRB

Sheet Metal Construction

The wind uplift testing was conducted on custom-fabricated fascia and coping architectural elements constructed according to SMACNA *Architectural Sheet Metal Manual*. The physical testing was done according to SPRI's ANSI standard ES-1 2003. All elements constructed must comply with the requirements of the SPRI standard *and* conform to the designs as tested as follows:

- **All fascia and coping metal thicknesses must meet the minimum requirements listed below in SPRI's Table 5 – Minimum Metal Thickness for Flatness.**
- **All fasteners must be used at the dimensions listed.**
- **All fasteners must have at least as the same diameter and length as those used in the test and be of a metal with an equivalent strength.**
- **Nailing patterns for fascia must adhere to those listed in Figure 2-1.**
- **No face height or width can exceed those actually tested.**
- **Continuous cleats must be used along the outside of the wall (face) to retain the outside leg.** ***Note: The cleats are thicker than the architectural coping and fascia for copper and steel but are the same thickness for the aluminum coping and fascia. Refer to the test report for details.***

Thicker gages than listed in Table 5 can be used. Closer fastener spacing can be used. Longer and larger diameter fasteners may be used. Narrower metal heights and widths can be used. However, even though all of these "increases" probably enhance the pull-off resistance no pull-off resistance higher than achieved in the physical testing by ATI can be claimed.

Table 5 – Minimum Metal Thickness for Flatness

Exposed Face	Galvanized Steel	Cold Rolled Copper	Formed Aluminum	Stainless Steel
Up to 4" (to 100 mm)	24 ga (0.028" 0.7 mm)	16 oz (0.022" 0.6 mm)	0.040" (1.0 mm)	26 ga (0.016" 0.4 mm)
>4" – 8" (>100 – 200 mm)	24 ga (0.028" 0.7 mm)	16 oz (0.022" 0.6 mm)	0.050" (1.3 mm)	26 ga (0.016" 0.4 mm)
>8" – 10" (>200 – 250 mm)	22 ga (0.034" 0.9 mm)	20 oz (0.027" 0.7 mm)	0.063" (1.6 mm)	24 ga (0.023" 0.6 mm)
>10" – 16" (>250 – 400 mm)	20 ga (0.040" 1.0 mm)	20 oz w/stiffening ribs.	0.080" (2.0 mm)	22 ga (0.029" 0.7 mm)

Membrane and Attachment Requirements for Fascia

Two types of membranes were tested—reinforced membranes in the tests with the aluminum fascia and unreinforced membrane in the tests with the copper and steel fascia. The test results clearly demonstrate that the pull-out forces that can be withstood by the membrane is primarily a function of the membrane's strength. While all membrane test pull-outs were within the SPRI minimum requirements, if the designer desires high pull-out strength then reinforced membrane should be specified.

The fastener pattern must follow that used in the physical testing conducted by ATI.

The testing results follow this page.

ANS/SPRI ES-1 2003 PERFORMANCE TEST REPORT

Rendered to:

SMACNA TESTING & RESEARCH INSTITUTE
Testing and Research Institute
4201 Lafayette Center Drive
Chantilly, Virginia 20153

Report No:	77085.01-122-31
Test Dates:	10/24/07
Through:	12/20/07
Report Date:	01/25/08

Product: Formed Gravel Stop Fascia and Formed Coping

Project Summary: Architectural Testing, Inc. was contracted by the SMACNA Testing & Research Institute to perform SPRI Test RE-1, SPRI Test RE-2 and SPRI Test RE-3 on fabricated aluminum gravel stop and roof coping materials in accordance with ANS/SPRI ES-1 2003. The average test results are summarized in the following table:

Table 1 Summary of Results

Test	High Load		Low Load		Average Load	
	(psf)	(lb)	(psf)	(lb)	(psf)	(lb)
SPRI Test RE-1 Roof Edge Termination	--	830	--	662	--	744
SPRI Test RE-2 Edge Flashing Pull-off	270	1835	190	1274	230	1558
SPRI Test RE-3 Coping Pull-off	250	2036	240	1926	240	1989

Test Methods: The test specimens were evaluated in accordance with the following:

ANS/SPRI ES-1 2003, *Wind Design Standard for Edge Systems Used with Low Slope Roofing Systems.*

Test Description:

SPRI Test RE-1, *Roof Edge Termination of Ballasted or Mechanically Attached Roofing Membrane Systems*. A 12 inch wide section of 0.062" thick formed aluminum gravel stop was attached to a pressure treated S-P-F roof edge mock-up utilizing a 0.042" thick reinforced TPO roofing membrane. The 12 inch gravel stop sections were cut at random which allowed the tests to be conducted with either 3 or 4 nails through the pre-punched holes. All fastening nails were 1-3/4" x 0.135" ring shank roofing nails. The roofing membrane was fixed to the crosshead of a SATEC Universal Test Machine and pulled at an approximate 45° angle from the restrained gravel stop assembly at a speed of 0.25" per minute. Load was applied until the membrane tore away from the nails. (See photos in Appendix A and Drawings in Appendix B.)

SPRI Test RE-2, *Pull-Off Test for Edge Flashings.* An 8 foot long section of 0.062" thick formed aluminum gravel stop was attached to a roof edge mock-up constructed of pressure treated S-P-F lumber. The top flange nailing pattern is described in Drawing Figure 2-1. The cleat was 0.062” thick aluminum. The cleat nails were located 2" from each end and 12" on center. Load was applied to the outward face of the gravel stop through 3" x 1/4" eye bolts with 1-3/4" fender washers located 6" from each end and 12" on center. An electric winch with chain attachments and a 2000 pound load cell (ICN: 62154) was used to apply and measure the test loads. Loading was applied according to the test method until the flashing pulled away from the cleat. (See photos in Appendix A and Drawings in Appendix B.)

SPRI Test RE-3, *Pull-Off Test for Copings.* An 8 foot long section of 0.062" thick formed aluminum coping was attached to a roof edge mock-up constructed of pressure treated S-P-F lumber. The inward face screw pattern is as described in Drawing Figure 3-1 but used #12 x 1-1/2" self-drilling hex head screws located 12" on center. The cleat nails were located 2" from each end and 12" on center. The cleat was 0.062” thick aluminum. Load was applied to the top and outward faces of the coping through 3" x 1/4" eye bolts with 1-3/4" fender washers located 6" from each end and 12" on center. An electric winch, mechanical winch, chain attachments, a 2000 pound load cell (ICN: 62154) and a 1000 pound ring force gage (ICN: Y000264) were used to apply and measure the loads. Loading was applied according to the test method until the 2000 pound load cell reached its capacity. (See photos in Appendix A and Drawings in Appendix B.)

Test Results: The results are reported in the following tables.

Table 2 SPRI Test RE-1, Roof Edge Termination

Sample	Maximum Applied Load (lb)	Failure Mode
1 (4 nails)	830	Tearing of membrane around nails
2 (3 nails)	662	Tearing of membrane around nails
3 (4 nails)	821	Tearing of membrane around nails
4 (3 nails)	696	Tearing of membrane around nails
5 (4 nails)	816	Tearing of membrane around nails
6 (3 nails)	713	Tearing of membrane around nails
Average	**756**	

Table 3 SPRI Test RE-2, Edge Flashing Pull-off

Sample	Sustained Pressure (psf)	Peak Load (lb)	Failure Mode
1	200	1,333	Edge Flashing pulled away from cleat
2	190	1,274	Edge Flashing pulled away from cleat
3	220	1,521	Edge Flashing pulled away from cleat
4	230	1,556	Edge Flashing pulled away from cleat
5	270	1,831	Edge Flashing pulled away from cleat
6	270	1,835	Edge Flashing pulled away from cleat
Average	**230**	**1,558**	

Table 4 SPRI Test RE-3, Coping Pull-off

Sample	Top Load		Face Load	
	Sustained Pressure (psf)	Maximum Applied Load (lb)	Sustained Pressure (psf)	Maximum Applied Load (lb)
1	240	1,926	240	800
2	240	1,967	240	800
3	250	2,008	250	833
4	250	2,036	250	833
5	250	2,010	250	833
Average	**246**	**1,989**	**246**	**820**

Notes: 1. Sustained Pressure is the greatest equivalent pressure achieved by the product without failure.
2. Maximum Applied Load is the applied test load at failure.

SPRI Test RE-2, Pull-Off Test for Edge Flashings

Test Procedure

8 ft long sections of 0.028 in thick formed copper and 0.031 in thick formed galvanized steel gravel stop / flashing were attached to a roof edge mock-up constructed of pressure treated S-P-F lumber. The top flange nailing pattern was as described in Figure 2-1 of the SMACNA Architectural Sheet Metal Manual. The copper cleats were 3-5/8 in by 0.033 in thick, the galvanized cleats were 3-5/8 in by 0.036 in thick and the nails were located 2 in from each end and 12 in on-center. Load was applied to the outward face of the gravel stop through 3 in x 1/4 in eye bolts with 1-3/4 in fender washers located 6 in from each end and 12 in on center. An electric winch with chain attachments and a 2000 pound load cell (ICN: 62154) were used to apply and measure the test loads. Loading was applied incrementally with relaxation periods according to the test method until the flashing pulled away from the cleat. Test dates were June 16 to June 18, 2008. See Photographs in Appendix A, Drawing in Appendix B and Datasheets in Appendix C.

Test Results

SPRI Test RE-2, Edge Flashing Pull-off - Copper

Specimen	Sustained Pressure (psf) [1]	Peak Load (lb) [2]
1	125	948
2	125	958
3	125	981
4	125	851
5	125	875
6	125	1010
Average:	**125**	**937**

SPRI Test RE-2, Edge Flashing Pull-off - Steel

Specimen	Sustained Pressure (psf) [1]	Peak Load (lb) [2]
1	200	1430
2	180	1294
3	230	1576
4	250	1841
5	200	1374
6	190	1351
Average:	**208**	**1477**

[1] *Sustained Pressure was the greatest equivalent pressure load held by the specimen for a minimum of one minute without failure*
[2] *Peak Load was the highest applied load at the time of failure*

Mode of failure for all specimens was edge flashing pulled away from cleat.

SPRI Test RE-3, Pull-Off Test for Copings

Test Procedure

8 ft long sections of 0.022 in thick formed copper and 0.024 in thick formed galvanized steel gravel coping were attached to a roof edge mock-up constructed of pressure treated S-P-F lumber. The roof side screw pattern was as described in Drawing Figure 3-1 of the SMACNA Architectural Sheet Metal Manual using #12 x 1-1/2 in self-drilling hex head screws but located 12 in on center. The copper cleats were 3-5/8 in by 0.033 in thick, the galvanized cleats were 3-5/8 in by 0.036 in thick and the cleat nails were located 2 in from each end and 12 in on-center. Load was applied to the top and outward faces of the coping through 3 in x 1/4 in eye bolts with 1-3/4 in fender washers located 6 in from each end and 12 in on-center. An electric winch, mechanical winch, chain attachments, a 2000 lb load cell (ICN: 62154) and a 1000 lb ring force gage (ICN: Y000264) were used to apply and measure the loads. Loading was applied incrementally with relaxation periods according to the test method until specimen disengagement from the cleat or the load cell was at maximum capacity. See Photographs in Appendix A, Drawing in Appendix B and Datasheets in Appendix C.

Test Results

SPRI Test RE-3 - Coping Pull-off - Copper
Test Dates: 07/31/08 through 08/07/08

Specimen	Sustained Pressure [1] (psf)	Peak Load (lb) [2]	
		On Top	On Face
1	190	1637	633
2	200	1764	667
3	160	1349	533
4	190	1651	633
5	220	1885	733
6	210	1786	700
Average:	**195**	**1679**	**650**

SPRI Test RE-3 - Coping Pull-off - Steel
Test Dates: 06/20/08 and 07/30/08 through 08/07/08

Specimen	Sustained Pressure [1] (psf)	Peak Load (lb) [2]	
		On Top	On Face
1 [3]	230	1980	767
2 [4]	250	2135	833
3 [5]	210	1720	700
4 [4]	250	2056	833
5 [4]	250	2137	833
6 [4]	250	2129	833
Average:	**240**	**2026**	**800**

[1] *Sustained Pressure was the greatest equivalent pressure load held by the specimen for a minimum of one minute without failure*
[2] *Peak Load was the highest applied load at the time of failure*
[3] *Test fixture failed with no specimen failure*
[4] *Testing was halted due to load cell capacity with no specimen failure*
[5] *Face failure as face load was being increased*

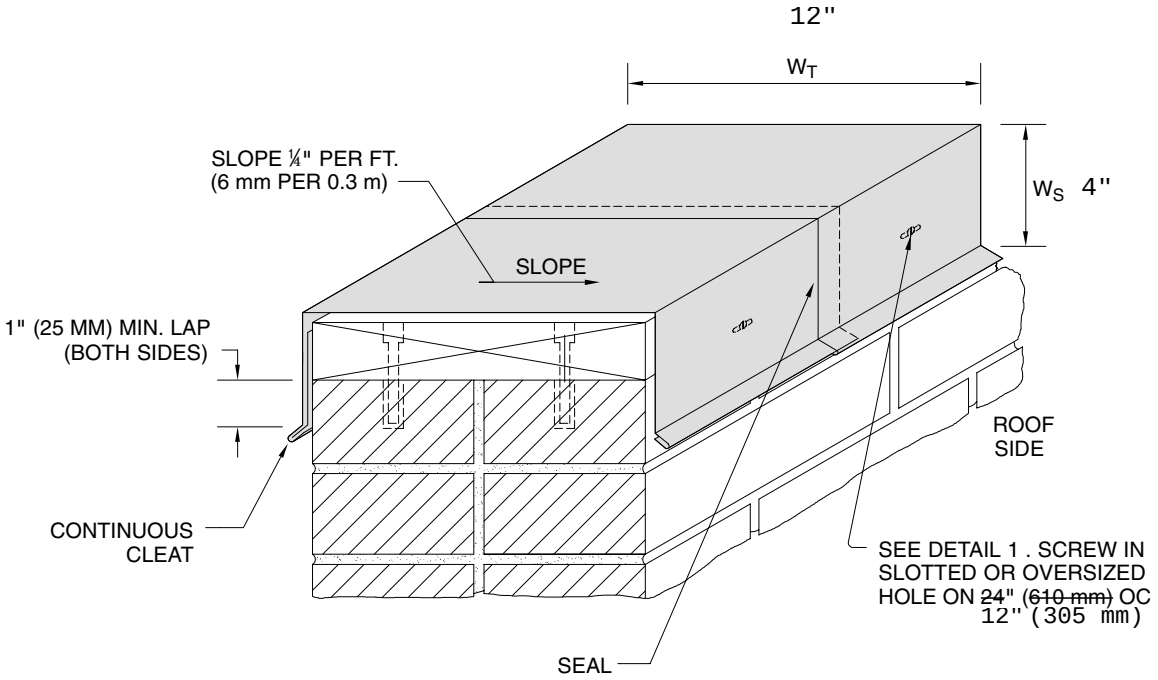

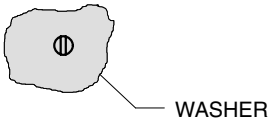

DETAIL 1

W_T, W_S AND JOINT SELECTIONS
ARE FROM TABLE 3-1
W_T = WIDTH OF THE TOP
W_S = WIDTH OF THE SIDE

FIGURE 3-1 FORMED METAL COPINGS — DESIGN DATA

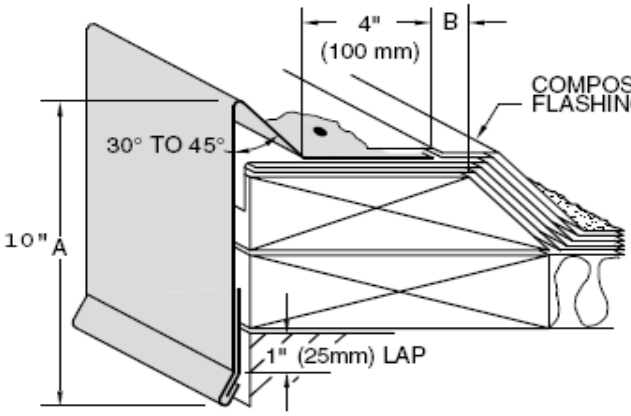

FIG 2-1A

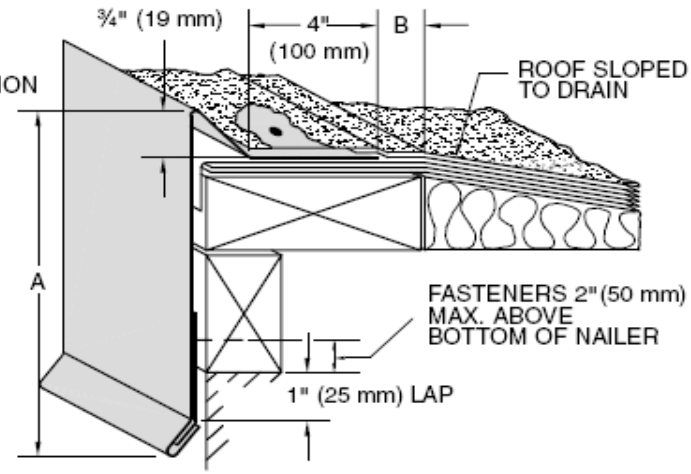

FIG 2-1B

A = 10" (254 mm) MAX. CLEATED

B = ½" (13 mm) MIN.

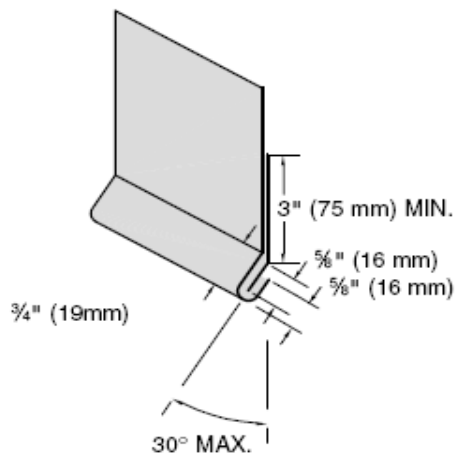

DETAIL 1

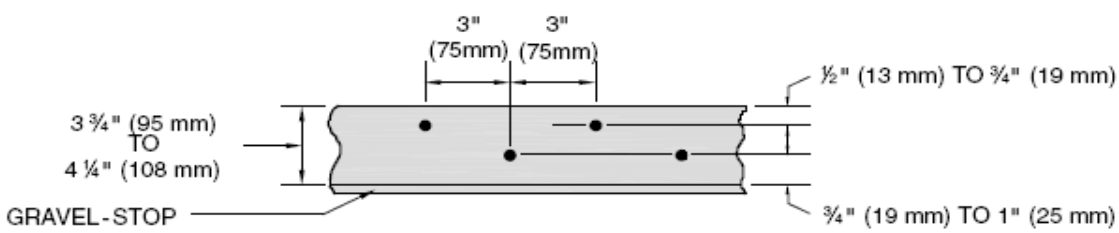

BASIC FLANGE NAILING PATTERN

FIGURE 2-1 FORMED GRAVEL-STOP–FASCIA — DESIGN DATA